NATIONAL INSTITUTE OF TECHNOLOGY AGARTALA
JIRANIA, AGARTALA , TRIPURA (W) , 799046

7-SEGMENT ALPHABET DISPLAY

DEPARTMENT :ELECTRONICS AND INSTRUMENTATION ENGINEERING

~SUBMITTED BY~

NAME	ENROLLMENT NUMBER
Nishant Kumar Karn	23UEI133
Nikhil Singh Dhruwe	23UEI142
Anuradha Kumari	23UEI154
Saswat Kumar Panigrahi	23UEI192
Pranjal Pal	23UEI215
MS Payal	23UEI214

SUBMITTED TO : DR. YOGESH KUMAR SARIYA

ACKNOWLEDGEMENT

We would like to extend our sincere gratitude to Dr. Yogesh Kumar Sariya sir for granting us the opportunity to work on this project. This experience has been immensely valuable in broadening our knowledge and skills in the field of Digital Electronics. We deeply appreciate the resources, guidance, and trust provided to us, which have played a pivotal role in enabling us to successfully explore and execute this project. This opportunity has not only enriched our understanding but has also motivated us to strive for excellence and innovation. Thank you for believing in our potential and supporting us throughout.

CONTENT

Sl. No.	Content	Page No.
1.	Abstract	1
2.	Introduction	2
3.	Literature Survey	3
4.	Methodology	4-5
5.	Components Required	6
6.	Working Principle	7-8
7.	Implementation	9-10
8.	Future Scope	11
9.	Result and Discussion	12
10.	Conclusion	13
11.	References	14
11.	Appendices	15

ABSTRACT

The objective of this project is to **design a basic alphabet input system using only OR gates and a 7-segment alphanumeric display**, without the use of microcontrollers or programmable devices. The system allows users to press switches corresponding to different alphabets (A–Z), and displays the selected character by illuminating the appropriate segments on the display using combinational logic built purely with OR gates.

INTODUCTION

The **7-segment alphabet display** project is a testament to the simplicity and power of fundamental digital electronics principles. This innovative endeavor focuses on creating a basic alphabet input system using **OR gates** and a 7-segment alphanumeric display, eliminating the need for microcontrollers or programmable devices. By leveraging **combinational logic and manual input switches**, the system allows users to illuminate specific segments of the display to represent **characters (A–Z)** in real-time.

LITERATURE SURVEY

Seven-Segment Displays:

Widely utilized in digital electronics, seven-segment displays are essential for representing characters in a compact and efficient manner. They have found applications in educational tools and embedded systems.

Logic Gate-Based Designs:

Combinational logic with basic gates like OR gates provides a cost-effective method for character representation, avoiding complex programmable devices.

Challenges in Alphabet Display:

Research addresses the difficulty of approximating alphabet shapes within the constraints of the segments, focusing on optimal mapping and logic designs

METHODOLOGY

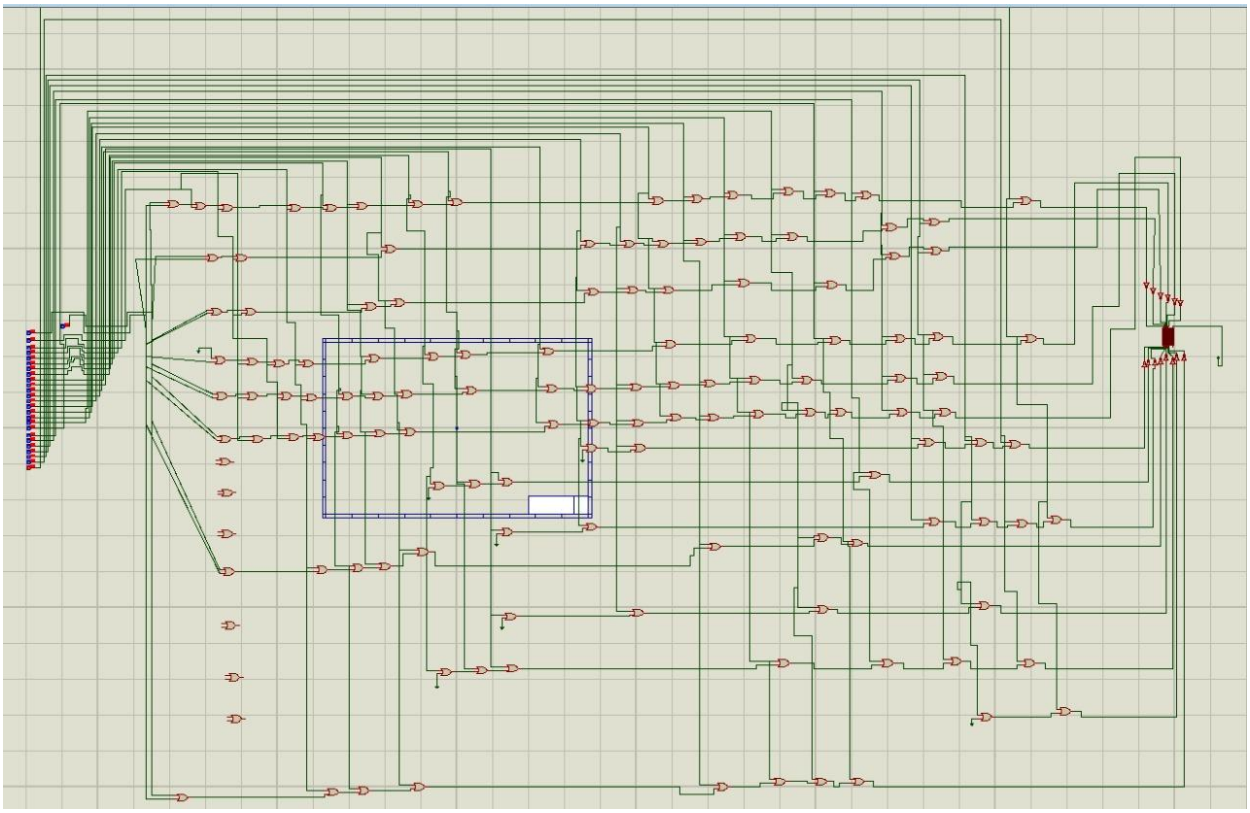

Figure: Logic gate diagram using combination of OR gates

METHODOLOGY

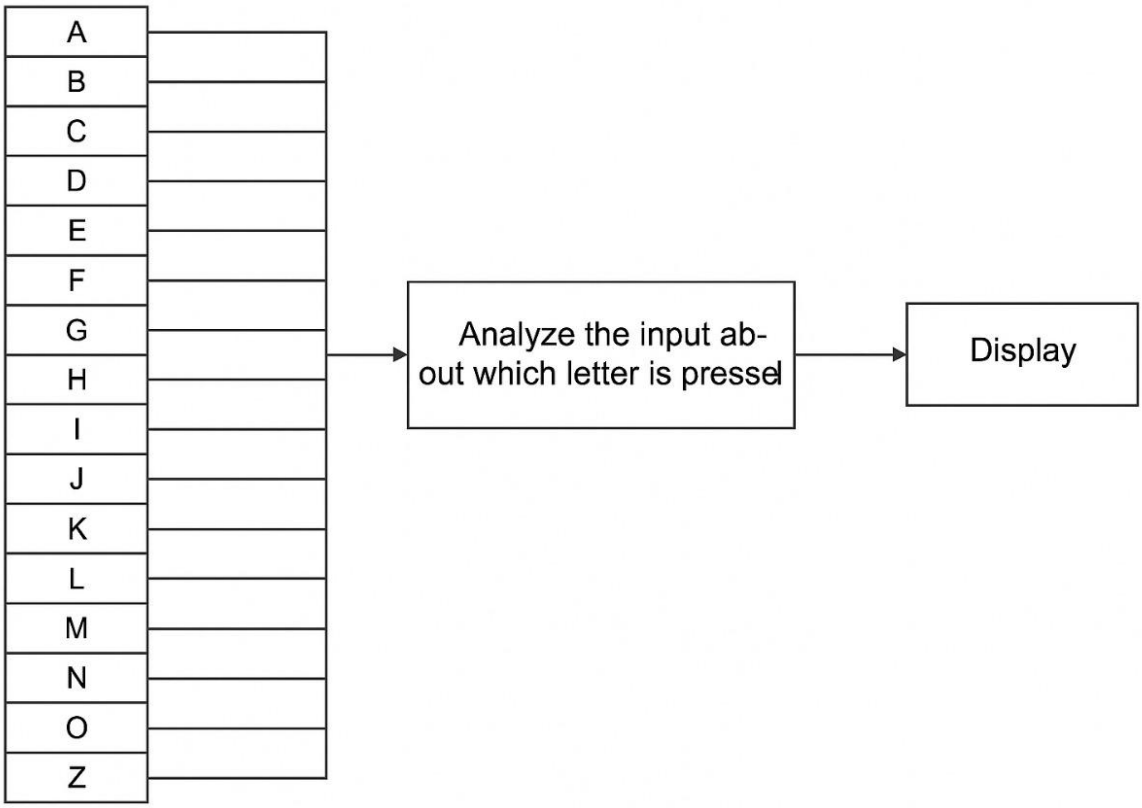

Figure: Block diagram using combination of OR gates

COMPONENTS REQUIRED

Table 1: List of Components

Sl. No.	Name	Specification	Quantity
1.	7 Segment Display	-	2
2.	IC 7432	2 input OR Gate	
3.	Toggle switch	-	26
4.	Bread Board	-	2

WORKING PRINCIPLE

Introduction to Logic-Based Display Co-Working Principle

The project uses pure combinational logic to display alphabets on a 7-segment alphanumeric display. No microcontroller or programmable device is used — only switches and OR gates. Each alphabet is represented by a unique combination of segment lines (a–n).The logic determines which segments light up for each character based on the pressed key (switch).

For example, pressing ‘A’ lights up segments a, b, c, e, f, g.

Role of Switches in Character Input

Each switch corresponds to one alphabet character (e.g., A–Z). When a switch is pressed, it outputs a logic HIGH (5V or 1) signal. This HIGH signal is connected to the segments required for that specific character. The switches act as manual input signals in a keyboard-like setup.

Switch A → Segment lines a, b, c, e, f, g.

WORKING PRINCIPLE

Segment Selection via OR Gate Logic

Each of the 7 segments is connected to the output of an OR gate. Inputs to each OR gate come from all switches that require that segment. If any one of the switches is pressed, the OR gate passes a HIGH signal to the segment, turning it ON. This logic allows multiple characters to share segments without interference.

Segment 'c' might be shared by A, B, and D — so all those switches connect to one OR gate for segment 'c'.

Output Display and Hardware Logic Summary

When a user presses any switch, the OR gates activate only the segments needed to form that character. The 7-segment display lights up in the correct pattern for the pressed alphabet. The system provides a clear, visible output based on simple hardware logic. This makes it ideal for educational use, digital logic training, or low-cost embedded alternatives.

A real-time display system made using only gates and switches — no code, just logic!

IMPLEMENTATION

Design Segment Mapping:

Identify which segments (a–n) need to be ON for each character (A–Z).

Refer to the standard 14-segment display map for each letter.

Assign Switches:

Connect each switch to represent a unique alphabet character.

Each switch will serve as the input source (logic HIGH) for a specific character.

Create OR Gate Logic:

For each segment, determine which characters need it.

Connect the outputs of all relevant switches to the input of an OR gate for that segment.

Repeat this for all 14 segments (a–n).

Connect OR Gates to Display:

Route the outputs of all OR gates to their corresponding segment pins on the 14-segment display.

Use current-limiting resistors between the gates and display pins.

IMPLEMENTATION

Power Up the Circuit:

Use a 5V DC regulated power supply.

Ensure proper grounding and clean connections.

Test Each Switch:

Press individual switches and verify that the corresponding character appears correctly on the display.

FUTURE SCOPE

Multi-Character Input System

Expand the project to allow entering multiple characters in sequence to form words or messages using a buffer/display array.

Programmable Logic Integration

Replace basic OR gate logic with PLDs (Programmable Logic Devices) or FPGAs to allow dynamic character assignment.

Microcontroller-Based Upgrade

Integrate a microcontroller (like Arduino) to control the display more efficiently. Add features like scrolling text, serial input, or backspace

Matrix-Based Keyboard Input

Build a proper keyboard matrix (like QWERTY) to reduce wiring complexity and improve user interface.

Voice-Controlled or Wireless Input

Interface Bluetooth modules or voice recognition modules for modern input methods.

Learning and Teaching Aid

Use this hardware logic system as an educational tool for teaching digital electronics and logic design.

RESULT AND DISCUSSION

The project successfully achieved the objective of designing a functional alphabet input system using OR gates and a 7-segment alphanumeric display. Key outcomes include:

1. All 26 alphabets (A–Z) were displayed on the 7-segment display using manual input switches.
2. The logic of OR gates effectively controlled the illumination of specific segments corresponding to each character.
3. The hardware circuit, consisting of switches, IC 7432 (OR gates), and 7-segment displays, operated reliably and produced clear, visible outputs for each input.
4. The system demonstrated seamless operation without the use of microcontrollers or programmable devices, showcasing the efficacy of combinational logic

CONCLUSION

This project successfully demonstrates the use of basic digital logic to create a functional alphabet keyboard system. By using only OR gates, switches, and a 14-segment display, it proves that character display is possible without any microcontroller or complex ICs. The project reinforces the concepts of combinational logic, segment mapping, and hardware-based design. It serves as an excellent learning tool for digital electronics, showcasing how logic gates can perform meaningful, visible tasks. The simplicity and expandability of this system make it a great base for further innovations in display technology and logic-based design.

REFERENCES

[1] M.Morris Mano and Micheal D.Ciletti, “Digital Design With an Introduction to the Verilog HDL, VHDL, and SystemVerilog,” sixth edition , 2015.

[2]Thomas L. Floyd, “Digital Fundamental”, 11th edition, 2015.

APPENDICES

SN5432, SN54LS32, SN54S32, SN7432, SN74LS32, SN74S32
QUADRUPLE 2-INPUT POSITIVE-OR GATES

DECEMBER 1983 – REVISED MARCH 1988

- **Package Options Include Plastic "Small Outline" Packages, Ceramic Chip Carriers and Flat Packages, and Plastic and Ceramic DIPs**
- **Dependable Texas Instruments Quality and Reliability**

description

These devices contain four independent 2-input OR gates.

The SN5432, SN54LS32 and SN54S32 are characterized for operation over the full military range of −55°C to 125°C. The SN7432, SN74LS32 and SN74S32 are characterized for operation from 0°C to 70°C.

FUNCTION TABLE (each gate)

INPUTS		OUTPUT
A	B	Y
H	X	H
X	H	H
L	L	L

logic symbol†

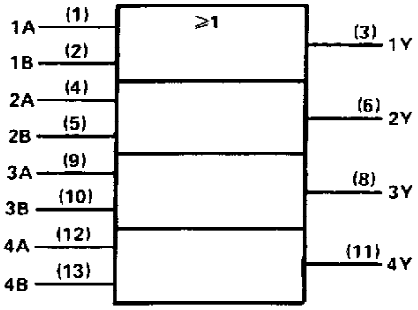

† This symbol is in accordance with ANSI/IEEE Std 91-1984 and IEC Publication 617-12.

Pin numbers shown are for D, J, N, or W packages.

SN5432, SN54LS32, SN54S32 . . . J OR W PACKAGE
SN7432 . . . N PACKAGE
SN74LS32, SN74S32 . . . D OR N PACKAGE
(TOP VIEW)

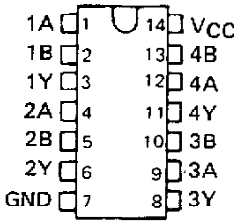

SN54LS32, SN54S32 . . . FK PACKAGE
(TOP VIEW)

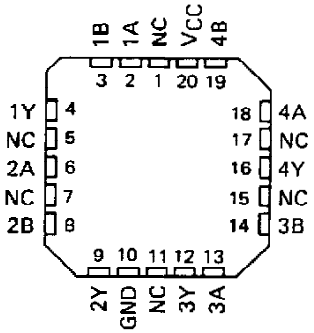

NC – No internal connection

logic diagram

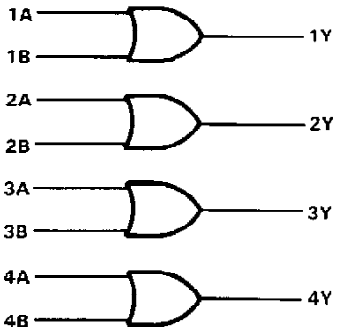

positive logic

$Y = A + B$ or $Y = \overline{\overline{A} \cdot \overline{B}}$

PRODUCTION DATA documents contain information current as of publication date. Products conform to specifications per the terms of Texas Instruments standard warranty. Production processing does not necessarily include testing of all parameters.

schematics (each gate)

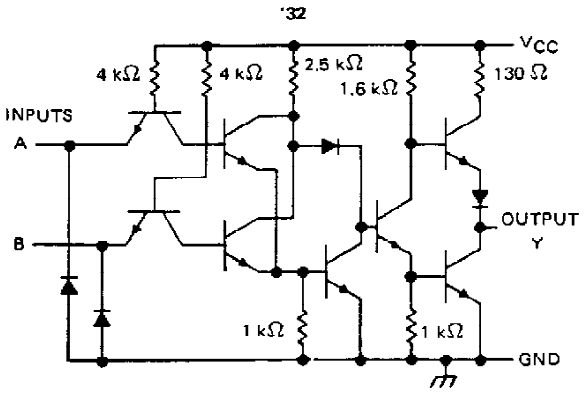

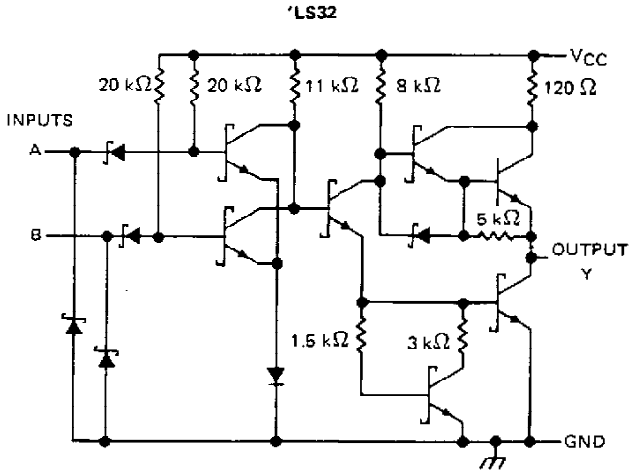

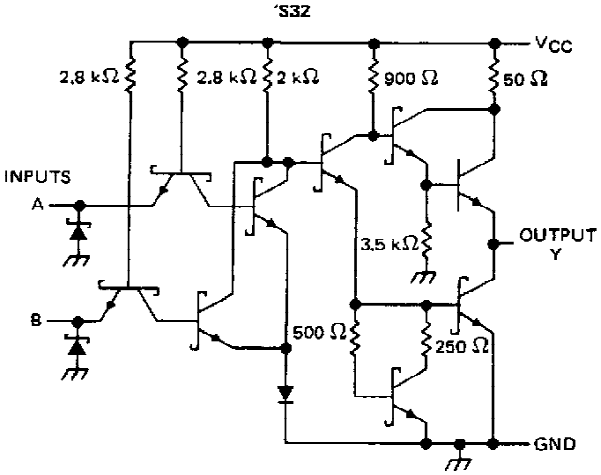

Resistor values shown are nominal.

absolute maximum ratings over operating free-air temperature range (unless otherwise noted)

Supply voltage, V_{CC} (see Note 1)		7 V
Input voltage: '32, 'S32		5.5 V
'LS32		7 V
Operating free-air temperature:	SN54'	−55°C to 125°C
	SN74'	0°C to 70°C
Storage temperature range		−65°C to 150°C

NOTE 1: Voltage values are with respect to network ground terminal.

recommended operating conditions

		SN5432			SN7432			UNIT
		MIN	NOM	MAX	MIN	NOM	MAX	
V_{CC}	Supply voltage	4.5	5	5.5	4.75	5	5.25	V
V_{IH}	High-level input voltage	2			2			V
V_{IL}	Low-level input voltage			0.8			0.8	V
I_{OH}	High-level output current			−0.8			−0.8	mA
I_{OL}	Low-level output current			16			16	mA
T_A	Operating free-air temperature	−55		125	0		70	°C

electrical characteristics over recommended operating free-air temperature range (unless otherwise noted)

PARAMETER	TEST CONDITIONS†			SN5432			SN7432			UNIT
				MIN	TYP‡	MAX	MIN	TYP‡	MAX	
V_{IK}	V_{CC} = MIN,	I_I = −12 mA				−1.5			−1.5	V
V_{OH}	V_{CC} = MIN,	V_{IH} = 2 V,	I_{OH} = −0.8 mA	2.4	3.4		2.4	3.4		V
V_{OL}	V_{CC} = MIN,	V_{IL} = 0.8 V,	I_{OL} = 16 mA		0.2	0.4		0.2	0.4	V
I_I	V_{CC} = MAX,	V_I = 5.5 V				1			1	mA
I_{IH}	V_{CC} = MAX,	V_I = 2.4 V				40			40	μA
I_{IL}	V_{CC} = MAX,	V_I = 0.4 V				−1.6			−1.6	mA
I_{OS}§	V_{CC} = MAX			−20		−55	−18		−55	mA
I_{CCH}	V_{CC} = MAX,	See Note 2			15	22		15	22	mA
I_{CCL}	V_{CC} = MAX,	V_I = 0 V			23	38		23	38	mA

† For conditions shown as MIN or MAX, use the appropriate value specified under recommended operating conditions.
‡ All typical values are at V_{CC} = 5 V, T_A = 25°C.
§ Not more than one output should be shorted at a time.
NOTE 2: One input at 4.5 V, all others at GND.

switching characteristics, V_{CC} = 5 V, T_A = 25°C (see note 3)

PARAMETER	FROM (INPUT)	TO (OUTPUT)	TEST CONDITIONS		MIN	TYP	MAX	UNIT
t_{PLH}	A or B	Y	R_L = 400 Ω,	C_L = 15 pF		10	15	ns
t_{PHL}						14	22	ns

NOTE 3: Load circuits and voltage waveforms are shown in Section 1.

recommended operating conditions

		SN54LS32			SN74LS32			UNIT
		MIN	NOM	MAX	MIN	NOM	MAX	
V_{CC}	Supply voltage	4.5	5	5.5	4.75	5	5.25	V
V_{IH}	High-level input voltage	2			2			V
V_{IL}	Low-level input voltage			0.7			0.8	V
I_{OH}	High-level output current			−0.4			−0.4	mA
I_{OL}	Low-level output current			4			8	mA
T_A	Operating free-air temperature	−55		125	0		70	°C

electrical characteristics over recommended operating free-air temperature range (unless otherwise noted)

PARAMETER	TEST CONDITIONS †			SN54LS32			SN74LS32			UNIT
				MIN	TYP‡	MAX	MIN	TYP‡	MAX	
V_{IK}	V_{CC} = MIN,	I_I = −18 mA				−1.5			−1.5	V
V_{OH}	V_{CC} = MIN,	V_{IH} = 2 V,	I_{OH} = −0.4 mA	2.5	3.4		2.7	3.4		V
V_{OL}	V_{CC} = MIN,	V_{IL} = MAX,	I_{OL} = 4 mA		0.25	0.4		0.25	0.4	V
	V_{CC} = MIN,	V_{IL} = MAX,	I_{OL} = 8 mA					0.35	0.5	
I_I	V_{CC} = MAX,	V_I = 7 V				0.1			0.1	mA
I_{IH}	V_{CC} = MAX,	V_I = 2.7 V				20			20	μA
I_{IL}	V_{CC} = MAX,	V_I = 0.4 V				−0.4			−0.4	mA
I_{OS}§	V_{CC} = MAX			−20		−100	−20		−100	mA
I_{CCH}	V_{CC} = MAX,	See Note 2			3.1	6.2		3.1	6.2	mA
I_{CCL}	V_{CC} = MAX,	V_I = 0 V			4.9	9.8		4.9	9.8	mA

† For conditions shown as MIN or MAX, use the appropriate value specified under recommended operating conditions.
‡ All typical values are at V_{CC} = 5 V, T_A = 25°C.
§ Not more than one output should be shorted at a time and the duration of the short-circuit should not exceed one second.
NOTE 2: One input at 4.5 V, all others at GND.

switching characteristics, V_{CC} = 5 V, T_A = 25°C (see note 3)

PARAMETER	FROM (INPUT)	TO (OUTPUT)	TEST CONDITIONS		MIN	TYP	MAX	UNIT
t_{PLH}	A or B	Y	R_L = 2 kΩ,	C_L = 15 pF		14	22	ns
t_{PHL}						14	22	ns

NOTE 3: Load circuits and voltage waveforms are shown in Section 1.

recommended operating conditions

		SN54S32			SN74S32			UNIT
		MIN	NOM	MAX	MIN	NOM	MAX	
V_{CC}	Supply voltage	4.5	5	5.5	4.75	5	5.25	V
V_{IH}	High-level input voltage	2			2			V
V_{IL}	Low-level input voltage			0.8			0.8	V
I_{OH}	High-level output current			−1			−1	mA
I_{OL}	Low-level output current			20			20	mA
T_A	Operating free-air temperature	−55		125	0		70	°C

electrical characteristics over recommended operating free-air temperature range (unless otherwise noted)

PARAMETER	TEST CONDITIONS †			SN54S32			SN74S32			UNIT
				MIN	TYP‡	MAX	MIN	TYP‡	MAX	
V_{IK}	V_{CC} = MIN,	I_I = −18 mA				−1.2			−1.2	V
V_{OH}	V_{CC} = MIN,	V_{IH} = 2 V,	I_{OH} = −1 mA	2.5	3.4		2.7	3.4		V
V_{OL}	V_{CC} = MIN,	V_{IL} = 0.8 V,	I_{OL} = 20 mA			0.5			0.5	V
I_I	V_{CC} = MAX,	V_I = 5.5 V				1			1	mA
I_{IH}	V_{CC} = MAX,	V_I = 2.7 V				50			50	μA
I_{IL}	V_{CC} = MAX,	V_I = 0.5 V				−2			−2	mA
I_{OS}§	V_{CC} = MAX			−40		−100	−40		−100	mA
I_{CCH}	V_{CC} = MAX,	See Note 2			18	32		18	32	mA
I_{CCL}	V_{CC} = MAX,	V_I = 0 V			38	68		38	68	mA

† For conditions shown as MIN or MAX, use the appropriate value specified under recommended operating conditions.
‡ All typical values are at V_{CC} = 5 V, T_A = 25°C.
§ Not more than one output should be shorted at a time and the duration of the short-circuit should not exceed one second.
NOTE 2: One input at 4.5 V, all others at GND.

switching characteristics, V_{CC} = 5 V, T_A = 25°C (see note 3)

PARAMETER	FROM (INPUT)	TO (OUTPUT)	TEST CONDITIONS		MIN	TYP	MAX	UNIT
t_{PLH}	A or B	Y	R_L = 280 Ω,	C_L = 15 pF		4	7	ns
t_{PHL}						4	7	ns
t_{PLH}	A or B	Y	R_L = 280 Ω,	C_L = 50 pF		5		ns
t_{PHL}						5		ns

NOTE 3: Load circuits and voltage waveforms are shown in Section 1.

PACKAGING INFORMATION

Orderable Device	Status (1)	Package Type	Package Drawing	Pins	Package Qty	Eco Plan (2)	Lead finish/ Ball material (6)	MSL Peak Temp (3)	Op Temp (°C)	Device Marking (4/5)	Samples
5962-9557401QCA	ACTIVE	CDIP	J	14	25	Non-RoHS & Green	SNPB	N / A for Pkg Type	-55 to 125	5962-9557401QC A SNJ5432J	Samples
5962-9557401QDA	ACTIVE	CFP	W	14	25	Non-RoHS & Green	SNPB	N / A for Pkg Type	-55 to 125	5962-9557401QD A SNJ5432W	Samples
5962-9557401QDA	ACTIVE	CFP	W	14	25	Non-RoHS & Green	SNPB	N / A for Pkg Type	-55 to 125	5962-9557401QD A SNJ5432W	Samples
JM38510/30501B2A	ACTIVE	LCCC	FK	20	55	Non-RoHS & Green	SNPB	N / A for Pkg Type	-55 to 125	JM38510/ 30501B2A	Samples
JM38510/30501B2A	ACTIVE	LCCC	FK	20	55	Non-RoHS & Green	SNPB	N / A for Pkg Type	-55 to 125	JM38510/ 30501B2A	Samples
JM38510/30501BCA	ACTIVE	CDIP	J	14	25	Non-RoHS & Green	SNPB	N / A for Pkg Type	-55 to 125	JM38510/ 30501BCA	Samples
JM38510/30501BCA	ACTIVE	CDIP	J	14	25	Non-RoHS & Green	SNPB	N / A for Pkg Type	-55 to 125	JM38510/ 30501BCA	Samples
JM38510/30501BDA	ACTIVE	CFP	W	14	25	Non-RoHS & Green	SNPB	N / A for Pkg Type	-55 to 125	JM38510/ 30501BDA	Samples
JM38510/30501BDA	ACTIVE	CFP	W	14	25	Non-RoHS & Green	SNPB	N / A for Pkg Type	-55 to 125	JM38510/ 30501BDA	Samples
JM38510/30501SCA	ACTIVE	CDIP	J	14	25	Non-RoHS & Green	SNPB	N / A for Pkg Type	-55 to 125	JM38510/ 30501SCA	Samples
JM38510/30501SCA	ACTIVE	CDIP	J	14	25	Non-RoHS & Green	SNPB	N / A for Pkg Type	-55 to 125	JM38510/ 30501SCA	Samples
JM38510/30501SDA	ACTIVE	CFP	W	14	25	Non-RoHS & Green	SNPB	N / A for Pkg Type	-55 to 125	JM38510/ 30501SDA	Samples
JM38510/30501SDA	ACTIVE	CFP	W	14	25	Non-RoHS & Green	SNPB	N / A for Pkg Type	-55 to 125	JM38510/ 30501SDA	Samples
M38510/30501B2A	ACTIVE	LCCC	FK	20	55	Non-RoHS & Green	SNPB	N / A for Pkg Type	-55 to 125	JM38510/ 30501B2A	Samples
M38510/30501B2A	ACTIVE	LCCC	FK	20	55	Non-RoHS & Green	SNPB	N / A for Pkg Type	-55 to 125	JM38510/ 30501B2A	Samples

Orderable Device	Status (1)	Package Type	Package Drawing	Pins	Package Qty	Eco Plan (2)	Lead finish/ Ball material (6)	MSL Peak Temp (3)	Op Temp (°C)	Device Marking (4/5)	Samples
M38510/30501BCA	ACTIVE	CDIP	J	14	25	Non-RoHS & Green	SNPB	N / A for Pkg Type	-55 to 125	JM38510/ 30501BCA	Samples
M38510/30501BCA	ACTIVE	CDIP	J	14	25	Non-RoHS & Green	SNPB	N / A for Pkg Type	-55 to 125	JM38510/ 30501BCA	Samples
M38510/30501BDA	ACTIVE	CFP	W	14	25	Non-RoHS & Green	SNPB	N / A for Pkg Type	-55 to 125	JM38510/ 30501BDA	Samples
M38510/30501BDA	ACTIVE	CFP	W	14	25	Non-RoHS & Green	SNPB	N / A for Pkg Type	-55 to 125	JM38510/ 30501BDA	Samples
M38510/30501SCA	ACTIVE	CDIP	J	14	25	Non-RoHS & Green	SNPB	N / A for Pkg Type	-55 to 125	JM38510/ 30501SCA	Samples
M38510/30501SCA	ACTIVE	CDIP	J	14	25	Non-RoHS & Green	SNPB	N / A for Pkg Type	-55 to 125	JM38510/ 30501SCA	Samples
M38510/30501SDA	ACTIVE	CFP	W	14	25	Non-RoHS & Green	SNPB	N / A for Pkg Type	-55 to 125	JM38510/ 30501SDA	Samples
M38510/30501SDA	ACTIVE	CFP	W	14	25	Non-RoHS & Green	SNPB	N / A for Pkg Type	-55 to 125	JM38510/ 30501SDA	Samples
SN5432J	ACTIVE	CDIP	J	14	25	Non-RoHS & Green	SNPB	N / A for Pkg Type	-55 to 125	SN5432J	Samples
SN5432J	ACTIVE	CDIP	J	14	25	Non-RoHS & Green	SNPB	N / A for Pkg Type	-55 to 125	SN5432J	Samples
SN54LS32J	ACTIVE	CDIP	J	14	25	Non-RoHS & Green	SNPB	N / A for Pkg Type	-55 to 125	SN54LS32J	Samples
SN54LS32J	ACTIVE	CDIP	J	14	25	Non-RoHS & Green	SNPB	N / A for Pkg Type	-55 to 125	SN54LS32J	Samples
SN54S32J	ACTIVE	CDIP	J	14	25	Non-RoHS & Green	SNPB	N / A for Pkg Type	-55 to 125	SN54S32J	Samples
SN54S32J	ACTIVE	CDIP	J	14	25	Non-RoHS & Green	SNPB	N / A for Pkg Type	-55 to 125	SN54S32J	Samples
SN7432N	ACTIVE	PDIP	N	14	25	RoHS & Green	NIPDAU	N / A for Pkg Type	0 to 70	SN7432N	Samples
SN7432N	ACTIVE	PDIP	N	14	25	RoHS & Green	NIPDAU	N / A for Pkg Type	0 to 70	SN7432N	Samples
SN7432NE4	ACTIVE	PDIP	N	14	25	RoHS & Green	NIPDAU	N / A for Pkg Type	0 to 70	SN7432N	Samples
SN7432NE4	ACTIVE	PDIP	N	14	25	RoHS & Green	NIPDAU	N / A for Pkg Type	0 to 70	SN7432N	Samples

Orderable Device	Status (1)	Package Type	Package Drawing	Pins	Package Qty	Eco Plan (2)	Lead finish/ Ball material (6)	MSL Peak Temp (3)	Op Temp (°C)	Device Marking (4/5)	Samples
SN74LS32D	OBSOLETE	SOIC	D	14		TBD	Call TI	Call TI	0 to 70	LS32	
SN74LS32D	OBSOLETE	SOIC	D	14		TBD	Call TI	Call TI	0 to 70	LS32	
SN74LS32DBR	ACTIVE	SSOP	DB	14	2000	RoHS & Green	NIPDAU	Level-1-260C-UNLIM	0 to 70	LS32	Samples
SN74LS32DBR	ACTIVE	SSOP	DB	14	2000	RoHS & Green	NIPDAU	Level-1-260C-UNLIM	0 to 70	LS32	Samples
SN74LS32DR	ACTIVE	SOIC	D	14	2500	RoHS & Green	NIPDAU	Level-1-260C-UNLIM	0 to 70	LS32	Samples
SN74LS32DR	ACTIVE	SOIC	D	14	2500	RoHS & Green	NIPDAU	Level-1-260C-UNLIM	0 to 70	LS32	Samples
SN74LS32DRE4	ACTIVE	SOIC	D	14	2500	RoHS & Green	NIPDAU	Level-1-260C-UNLIM	0 to 70	LS32	Samples
SN74LS32DRE4	ACTIVE	SOIC	D	14	2500	RoHS & Green	NIPDAU	Level-1-260C-UNLIM	0 to 70	LS32	Samples
SN74LS32DRG4	ACTIVE	SOIC	D	14	2500	RoHS & Green	NIPDAU	Level-1-260C-UNLIM	0 to 70	LS32	Samples
SN74LS32DRG4	ACTIVE	SOIC	D	14	2500	RoHS & Green	NIPDAU	Level-1-260C-UNLIM	0 to 70	LS32	Samples
SN74LS32N	ACTIVE	PDIP	N	14	25	RoHS & Green	NIPDAU	N / A for Pkg Type	0 to 70	SN74LS32N	Samples
SN74LS32N	ACTIVE	PDIP	N	14	25	RoHS & Green	NIPDAU	N / A for Pkg Type	0 to 70	SN74LS32N	Samples
SN74LS32NE4	ACTIVE	PDIP	N	14	25	RoHS & Green	NIPDAU	N / A for Pkg Type	0 to 70	SN74LS32N	Samples
SN74LS32NE4	ACTIVE	PDIP	N	14	25	RoHS & Green	NIPDAU	N / A for Pkg Type	0 to 70	SN74LS32N	Samples
SN74LS32NSR	ACTIVE	SOP	NS	14	2000	RoHS & Green	NIPDAU	Level-1-260C-UNLIM	0 to 70	74LS32	Samples
SN74LS32NSR	ACTIVE	SOP	NS	14	2000	RoHS & Green	NIPDAU	Level-1-260C-UNLIM	0 to 70	74LS32	Samples
SN74LS32NSRG4	ACTIVE	SOP	NS	14	2000	RoHS & Green	NIPDAU	Level-1-260C-UNLIM	0 to 70	74LS32	Samples
SN74LS32NSRG4	ACTIVE	SOP	NS	14	2000	RoHS & Green	NIPDAU	Level-1-260C-UNLIM	0 to 70	74LS32	Samples
SN74S32D	OBSOLETE	SOIC	D	14		TBD	Call TI	Call TI	0 to 70	S32	
SN74S32D	OBSOLETE	SOIC	D	14		TBD	Call TI	Call TI	0 to 70	S32	
SN74S32DR	ACTIVE	SOIC	D	14	2500	RoHS & Green	NIPDAU	Level-1-260C-UNLIM	0 to 70	S32	Samples
SN74S32DR	ACTIVE	SOIC	D	14	2500	RoHS & Green	NIPDAU	Level-1-260C-UNLIM	0 to 70	S32	Samples

Orderable Device	Status (1)	Package Type	Package Drawing	Pins	Package Qty	Eco Plan (2)	Lead finish/ Ball material (6)	MSL Peak Temp (3)	Op Temp (°C)	Device Marking (4/5)	Samples
SN74S32N	ACTIVE	PDIP	N	14	25	RoHS & Green	NIPDAU	N / A for Pkg Type	0 to 70	SN74S32N	Samples
SN74S32N	ACTIVE	PDIP	N	14	25	RoHS & Green	NIPDAU	N / A for Pkg Type	0 to 70	SN74S32N	Samples
SNJ5432J	ACTIVE	CDIP	J	14	25	Non-RoHS & Green	SNPB	N / A for Pkg Type	-55 to 125	5962-9557401QC A SNJ5432J	Samples
SNJ5432J	ACTIVE	CDIP	J	14	25	Non-RoHS & Green	SNPB	N / A for Pkg Type	-55 to 125	5962-9557401QC A SNJ5432J	Samples
SNJ5432W	ACTIVE	CFP	W	14	25	Non-RoHS & Green	SNPB	N / A for Pkg Type	-55 to 125	5962-9557401QD A SNJ5432W	Samples
SNJ5432W	ACTIVE	CFP	W	14	25	Non-RoHS & Green	SNPB	N / A for Pkg Type	-55 to 125	5962-9557401QD A SNJ5432W	Samples
SNJ54LS32FK	ACTIVE	LCCC	FK	20	55	Non-RoHS & Green	SNPB	N / A for Pkg Type	-55 to 125	SNJ54LS 32FK	Samples
SNJ54LS32FK	ACTIVE	LCCC	FK	20	55	Non-RoHS & Green	SNPB	N / A for Pkg Type	-55 to 125	SNJ54LS 32FK	Samples
SNJ54LS32J	ACTIVE	CDIP	J	14	25	Non-RoHS & Green	SNPB	N / A for Pkg Type	-55 to 125	SNJ54LS32J	Samples
SNJ54LS32J	ACTIVE	CDIP	J	14	25	Non-RoHS & Green	SNPB	N / A for Pkg Type	-55 to 125	SNJ54LS32J	Samples
SNJ54LS32W	ACTIVE	CFP	W	14	25	Non-RoHS & Green	SNPB	N / A for Pkg Type	-55 to 125	SNJ54LS32W	Samples
SNJ54LS32W	ACTIVE	CFP	W	14	25	Non-RoHS & Green	SNPB	N / A for Pkg Type	-55 to 125	SNJ54LS32W	Samples
SNJ54S32J	ACTIVE	CDIP	J	14	25	Non-RoHS & Green	SNPB	N / A for Pkg Type	-55 to 125	SNJ54S32J	Samples
SNJ54S32J	ACTIVE	CDIP	J	14	25	Non-RoHS & Green	SNPB	N / A for Pkg Type	-55 to 125	SNJ54S32J	Samples
SNJ54S32W	ACTIVE	CFP	W	14	25	Non-RoHS & Green	SNPB	N / A for Pkg Type	-55 to 125	SNJ54S32W	Samples
SNJ54S32W	ACTIVE	CFP	W	14	25	Non-RoHS & Green	SNPB	N / A for Pkg Type	-55 to 125	SNJ54S32W	Samples

(1) The marketing status values are defined as follows:
ACTIVE: Product device recommended for new designs.
LIFEBUY: TI has announced that the device will be discontinued, and a lifetime-buy period is in effect.
NRND: Not recommended for new designs. Device is in production to support existing customers, but TI does not recommend using this part in a new design.
PREVIEW: Device has been announced but is not in production. Samples may or may not be available.
OBSOLETE: TI has discontinued the production of the device.

(2) **RoHS:** TI defines "RoHS" to mean semiconductor products that are compliant with the current EU RoHS requirements for all 10 RoHS substances, including the requirement that RoHS substance do not exceed 0.1% by weight in homogeneous materials. Where designed to be soldered at high temperatures, "RoHS" products are suitable for use in specified lead-free processes. TI may reference these types of products as "Pb-Free".
RoHS Exempt: TI defines "RoHS Exempt" to mean products that contain lead but are compliant with EU RoHS pursuant to a specific EU RoHS exemption.
Green: TI defines "Green" to mean the content of Chlorine (Cl) and Bromine (Br) based flame retardants meet JS709B low halogen requirements of <=1000ppm threshold. Antimony trioxide based flame retardants must also meet the <=1000ppm threshold requirement.

(3) MSL, Peak Temp. - The Moisture Sensitivity Level rating according to the JEDEC industry standard classifications, and peak solder temperature.

(4) There may be additional marking, which relates to the logo, the lot trace code information, or the environmental category on the device.

(5) Multiple Device Markings will be inside parentheses. Only one Device Marking contained in parentheses and separated by a "~" will appear on a device. If a line is indented then it is a continuation of the previous line and the two combined represent the entire Device Marking for that device.

(6) Lead finish/Ball material - Orderable Devices may have multiple material finish options. Finish options are separated by a vertical ruled line. Lead finish/Ball material values may wrap to two lines if the finish value exceeds the maximum column width.

Important Information and Disclaimer: The information provided on this page represents TI's knowledge and belief as of the date that it is provided. TI bases its knowledge and belief on information provided by third parties, and makes no representation or warranty as to the accuracy of such information. Efforts are underway to better integrate information from third parties. TI has taken and continues to take reasonable steps to provide representative and accurate information but may not have conducted destructive testing or chemical analysis on incoming materials and chemicals. TI and TI suppliers consider certain information to be proprietary, and thus CAS numbers and other limited information may not be available for release.

In no event shall TI's liability arising out of such information exceed the total purchase price of the TI part(s) at issue in this document sold by TI to Customer on an annual basis.

OTHER QUALIFIED VERSIONS OF SN5432, SN54LS32, SN54LS32-SP, SN54S32, SN7432, SN74LS32, SN74S32 :

- Catalog : SN7432, SN74LS32, SN54LS32, SN74S32
- Military : SN5432, SN54LS32, SN54S32
- Space : SN54LS32-SP

NOTE: Qualified Version Definitions:

- Catalog - TI's standard catalog product
- Military - QML certified for Military and Defense Applications
- Space - Radiation tolerant, ceramic packaging and qualified for use in Space-based application

TAPE AND REEL INFORMATION

REEL DIMENSIONS

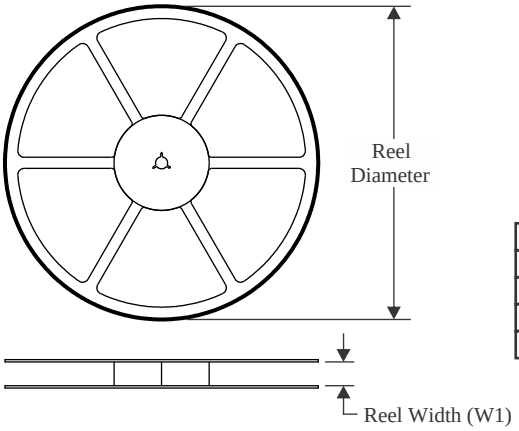

TAPE DIMENSIONS

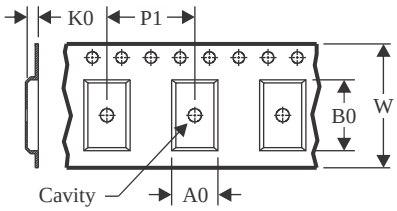

A0	Dimension designed to accommodate the component width
B0	Dimension designed to accommodate the component length
K0	Dimension designed to accommodate the component thickness
W	Overall width of the carrier tape
P1	Pitch between successive cavity centers

QUADRANT ASSIGNMENTS FOR PIN 1 ORIENTATION IN TAPE

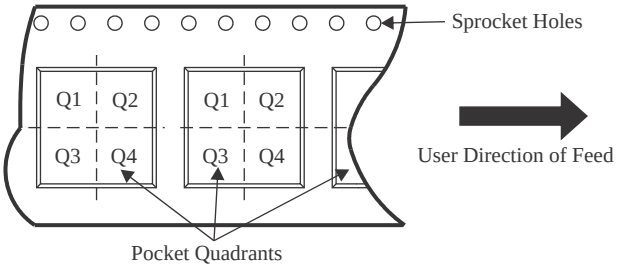

*All dimensions are nominal

Device	Package Type	Package Drawing	Pins	SPQ	Reel Diameter (mm)	Reel Width W1 (mm)	A0 (mm)	B0 (mm)	K0 (mm)	P1 (mm)	W (mm)	Pin1 Quadrant
SN74LS32DBR	SSOP	DB	14	2000	330.0	16.4	8.35	6.6	2.4	12.0	16.0	Q1
SN74LS32DR	SOIC	D	14	2500	330.0	16.4	6.5	9.0	2.1	8.0	16.0	Q1
SN74LS32NSR	SOP	NS	14	2000	330.0	16.4	8.2	10.5	2.5	12.0	16.0	Q1
SN74LS32NSR	SOP	NS	14	2000	330.0	16.4	8.2	10.5	2.5	12.0	16.0	Q1
SN74S32DR	SOIC	D	14	2500	330.0	16.4	6.5	9.0	2.1	8.0	16.0	Q1

TAPE AND REEL BOX DIMENSIONS

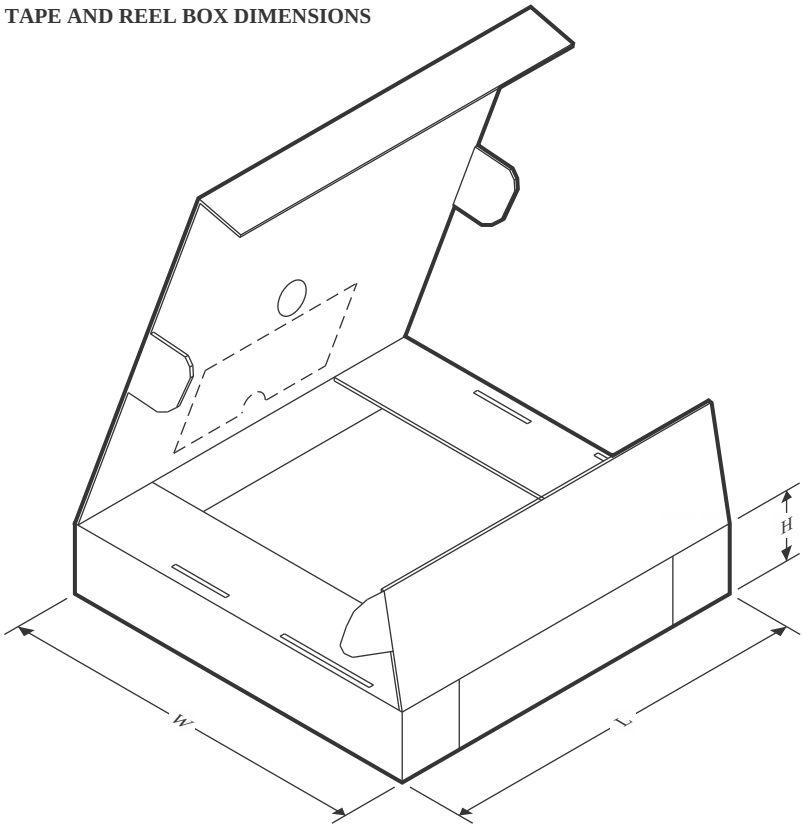

*All dimensions are nominal

Device	Package Type	Package Drawing	Pins	SPQ	Length (mm)	Width (mm)	Height (mm)
SN74LS32DBR	SSOP	DB	14	2000	356.0	356.0	35.0
SN74LS32DR	SOIC	D	14	2500	356.0	356.0	35.0
SN74LS32NSR	SOP	NS	14	2000	353.0	353.0	32.0
SN74LS32NSR	SOP	NS	14	2000	356.0	356.0	35.0
SN74S32DR	SOIC	D	14	2500	356.0	356.0	35.0

TUBE

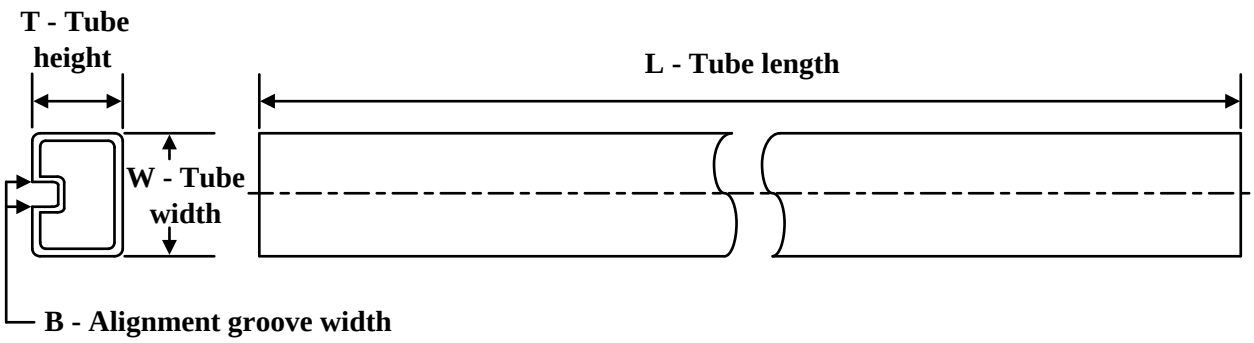

*All dimensions are nominal

Device	Package Name	Package Type	Pins	SPQ	L (mm)	W (mm)	T (µm)	B (mm)
5962-9557401QDA	W	CFP	14	25	506.98	26.16	6220	NA
JM38510/30501B2A	FK	LCCC	20	55	506.98	12.06	2030	NA
JM38510/30501BDA	W	CFP	14	25	506.98	26.16	6220	NA
JM38510/30501SDA	W	CFP	14	25	506.98	26.16	6220	NA
M38510/30501B2A	FK	LCCC	20	55	506.98	12.06	2030	NA
M38510/30501BDA	W	CFP	14	25	506.98	26.16	6220	NA
M38510/30501SDA	W	CFP	14	25	506.98	26.16	6220	NA
SN7432N	N	PDIP	14	25	506	13.97	11230	4.32
SN7432N	N	PDIP	14	25	506	13.97	11230	4.32
SN7432NE4	N	PDIP	14	25	506	13.97	11230	4.32
SN7432NE4	N	PDIP	14	25	506	13.97	11230	4.32
SN74LS32N	N	PDIP	14	25	506	13.97	11230	4.32
SN74LS32N	N	PDIP	14	25	506	13.97	11230	4.32
SN74LS32NE4	N	PDIP	14	25	506	13.97	11230	4.32
SN74LS32NE4	N	PDIP	14	25	506	13.97	11230	4.32
SN74S32N	N	PDIP	14	25	506	13.97	11230	4.32
SN74S32N	N	PDIP	14	25	506	13.97	11230	4.32
SNJ5432W	W	CFP	14	25	506.98	26.16	6220	NA
SNJ54LS32FK	FK	LCCC	20	55	506.98	12.06	2030	NA
SNJ54LS32W	W	CFP	14	25	506.98	26.16	6220	NA
SNJ54S32W	W	CFP	14	25	506.98	26.16	6220	NA

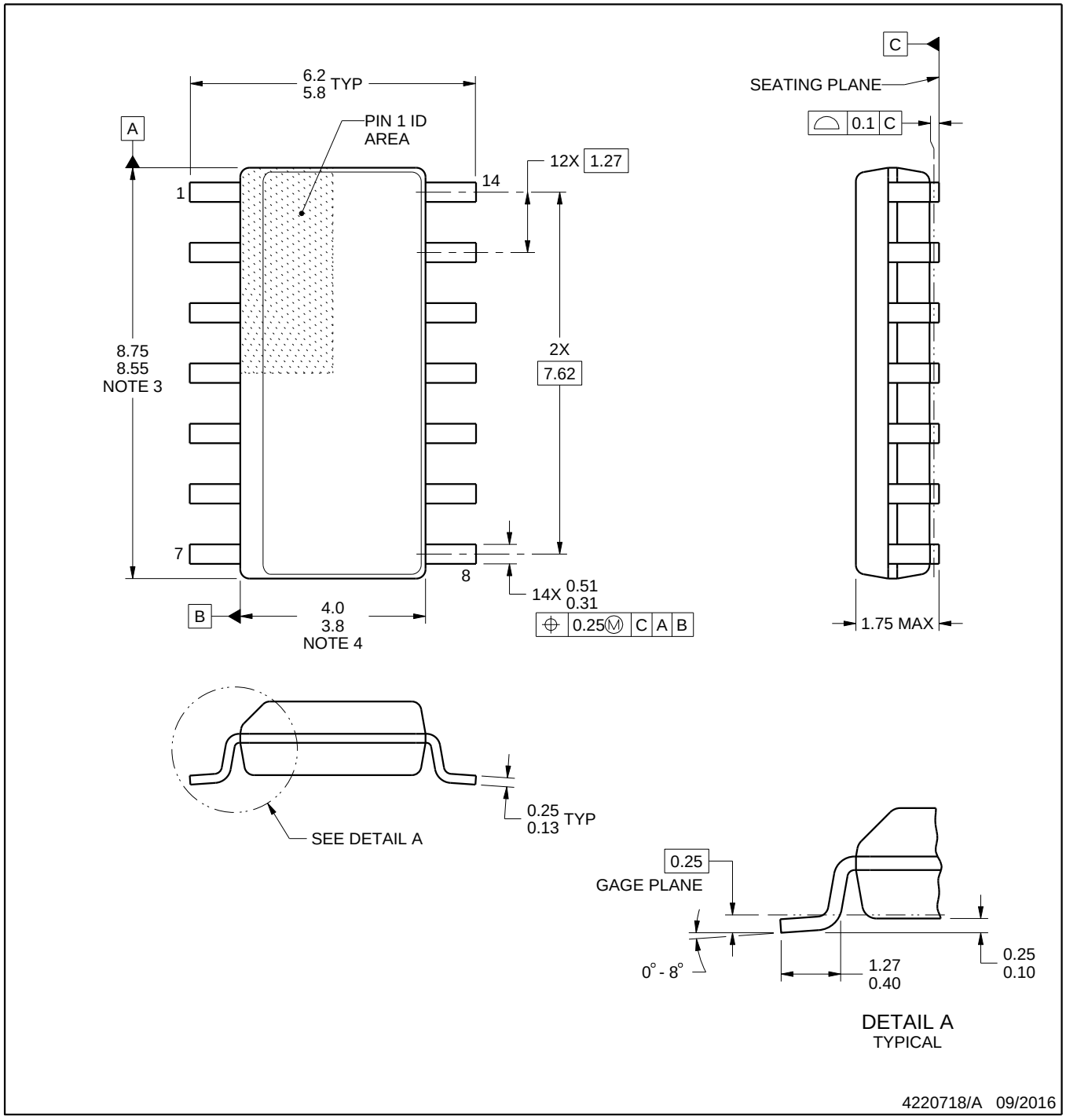

NOTES:

1. All linear dimensions are in millimeters. Dimensions in parenthesis are for reference only. Dimensioning and tolerancing per ASME Y14.5M.
2. This drawing is subject to change without notice.
3. This dimension does not include mold flash, protrusions, or gate burrs. Mold flash, protrusions, or gate burrs shall not exceed 0.15 mm, per side.
4. This dimension does not include interlead flash. Interlead flash shall not exceed 0.43 mm, per side.
5. Reference JEDEC registration MS-012, variation AB.

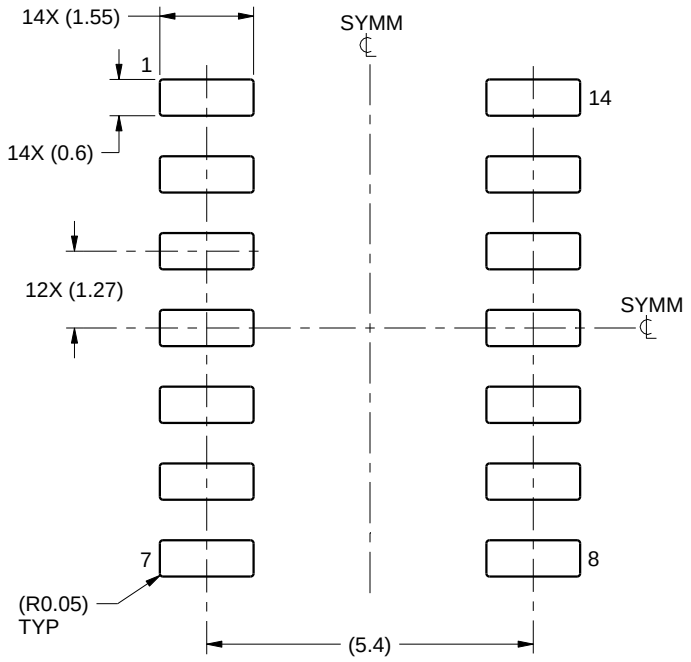

LAND PATTERN EXAMPLE
SCALE:8X

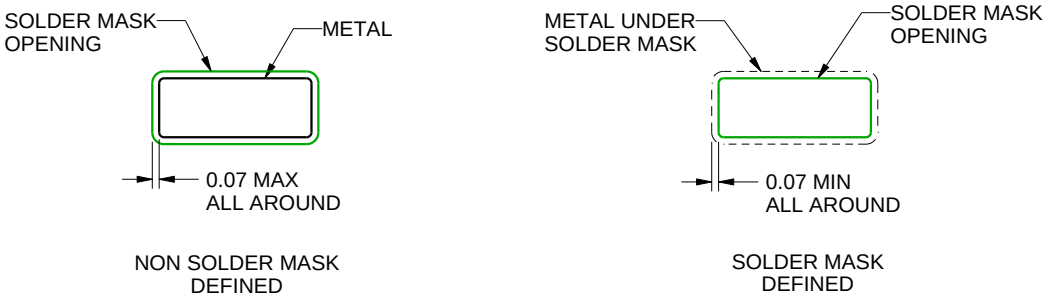

SOLDER MASK DETAILS

4220718/A 09/2016

NOTES: (continued)

6. Publication IPC-7351 may have alternate designs.
7. Solder mask tolerances between and around signal pads can vary based on board fabrication site.

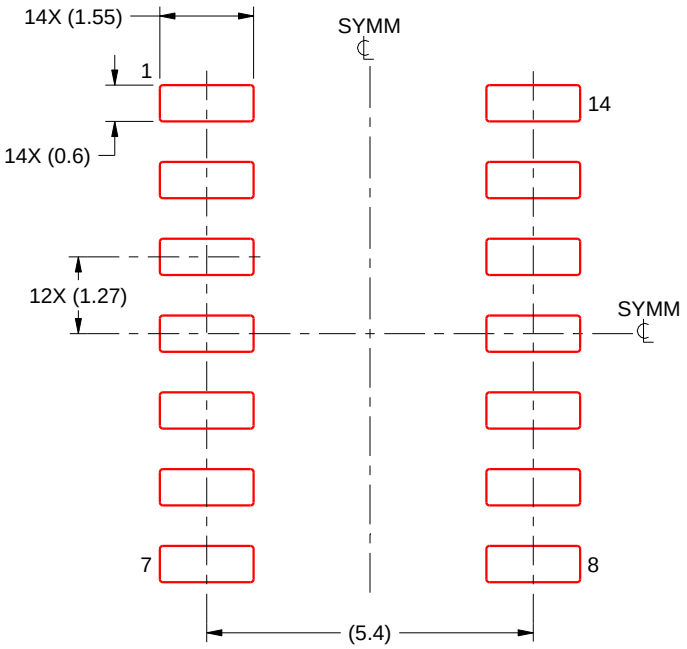

SOLDER PASTE EXAMPLE
BASED ON 0.125 mm THICK STENCIL
SCALE:8X

4220718/A 09/2016

NOTES: (continued)

8. Laser cutting apertures with trapezoidal walls and rounded corners may offer better paste release. IPC-7525 may have alternate design recommendations.
9. Board assembly site may have different recommendations for stencil design.

MECHANICAL DATA

NS (R-PDSO-G)** **PLASTIC SMALL-OUTLINE PACKAGE**

14-PINS SHOWN

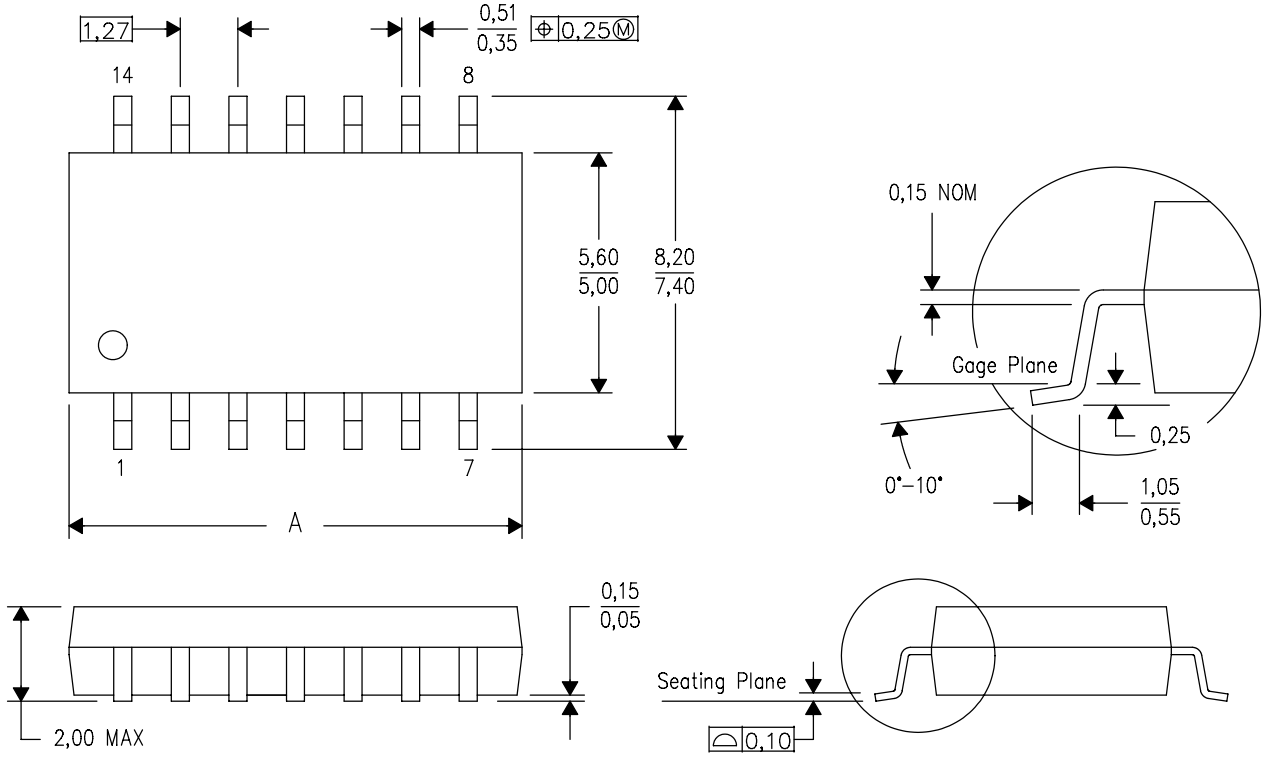

DIM \ PINS **	14	16	20	24
A MAX	10,50	10,50	12,90	15,30
A MIN	9,90	9,90	12,30	14,70

4040062/C 03/03

NOTES:
A. All linear dimensions are in millimeters.
B. This drawing is subject to change without notice.
C. Body dimensions do not include mold flash or protrusion, not to exceed 0,15.

W (R–GDFP–F14) CERAMIC DUAL FLATPACK

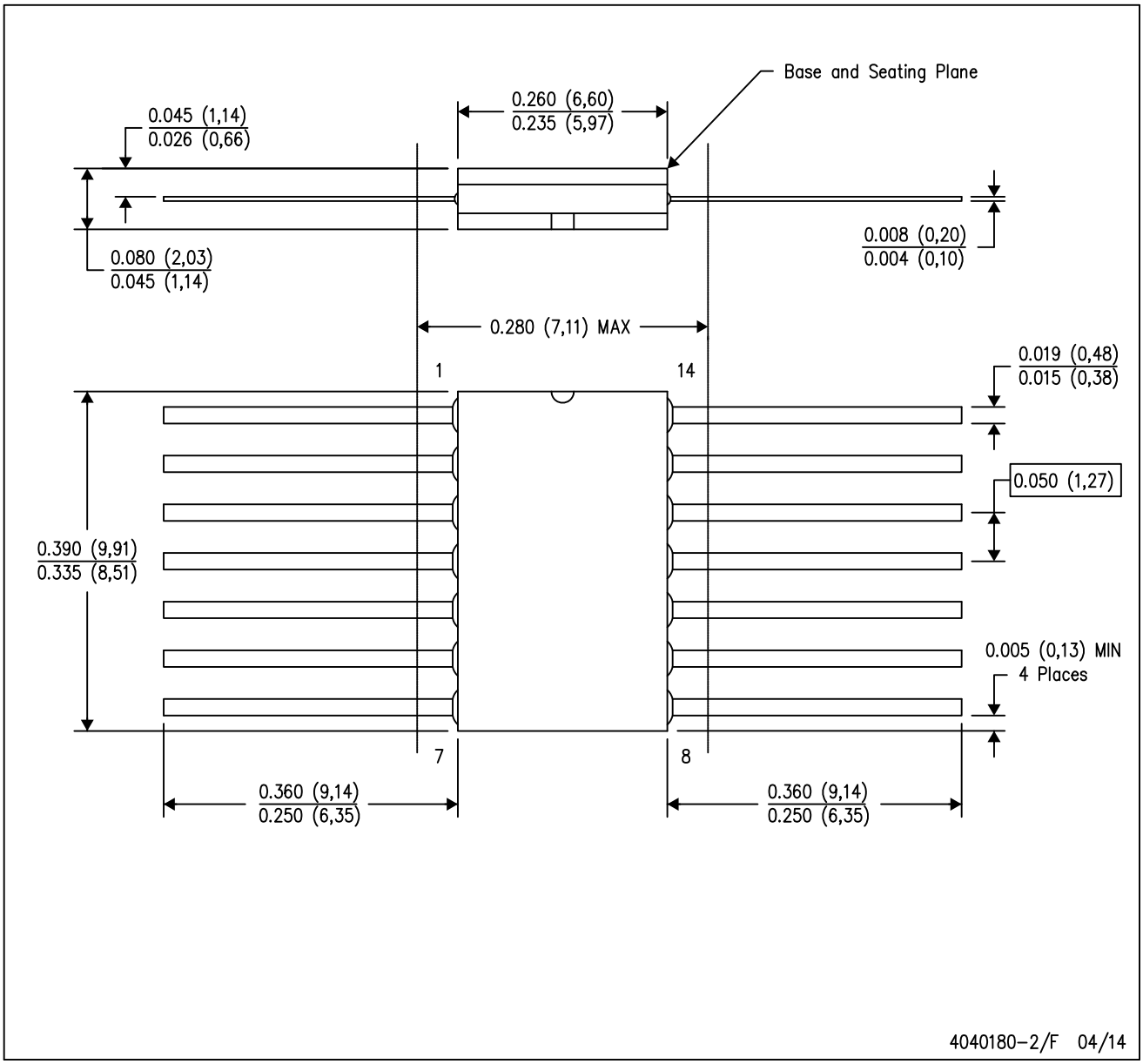

NOTES:
A. All linear dimensions are in inches (millimeters).
B. This drawing is subject to change without notice.
C. This package can be hermetically sealed with a ceramic lid using glass frit.
D. Index point is provided on cap for terminal identification only.
E. Falls within MIL STD 1835 GDFP1–F14

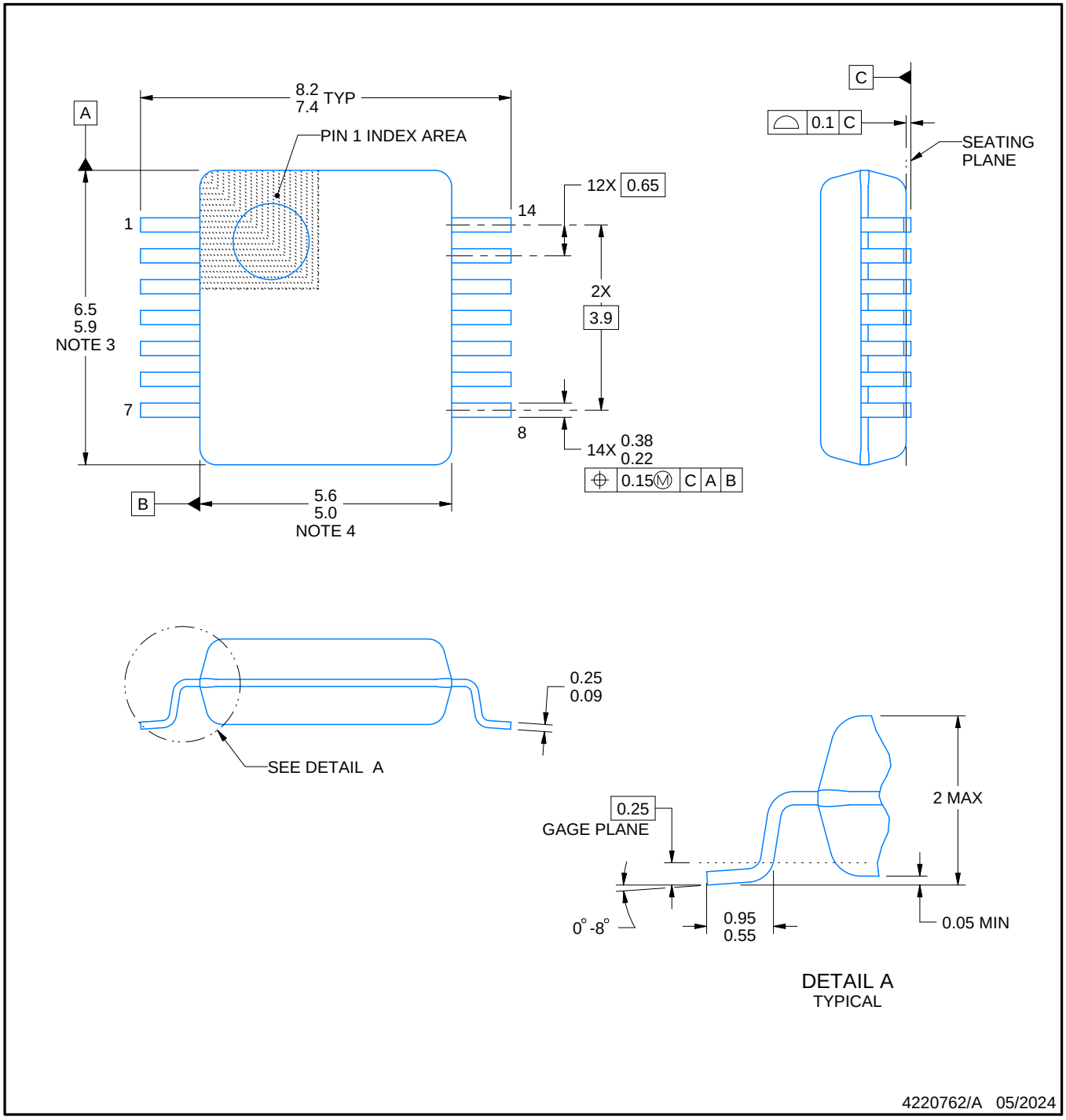

NOTES:

1. All linear dimensions are in millimeters. Any dimensions in parenthesis are for reference only. Dimensioning and tolerancing per ASME Y14.5M.
2. This drawing is subject to change without notice.
3. This dimension does not include mold flash, protrusions, or gate burrs. Mold flash, protrusions, or gate burrs shall not exceed 0.15 mm per side.
4. Reference JEDEC registration MO-150.

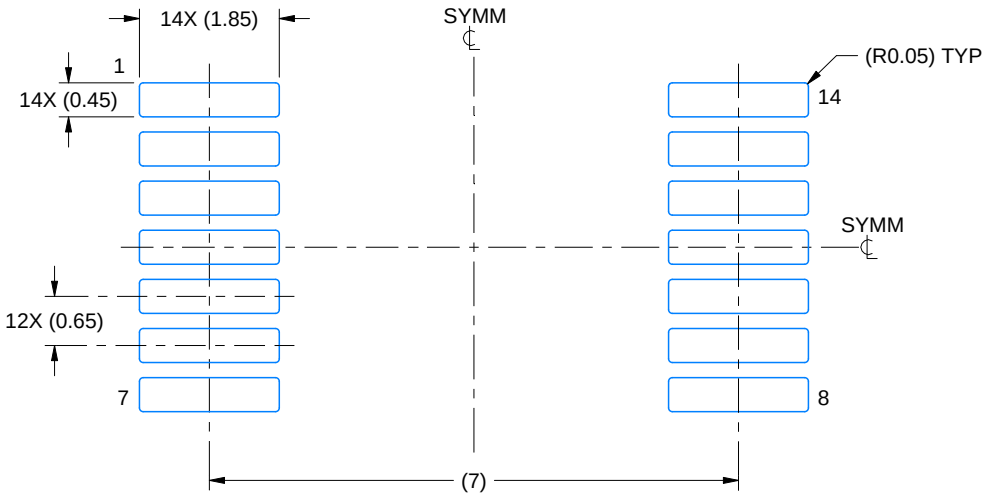

LAND PATTERN EXAMPLE
EXPOSED METAL SHOWN
SCALE: 10X

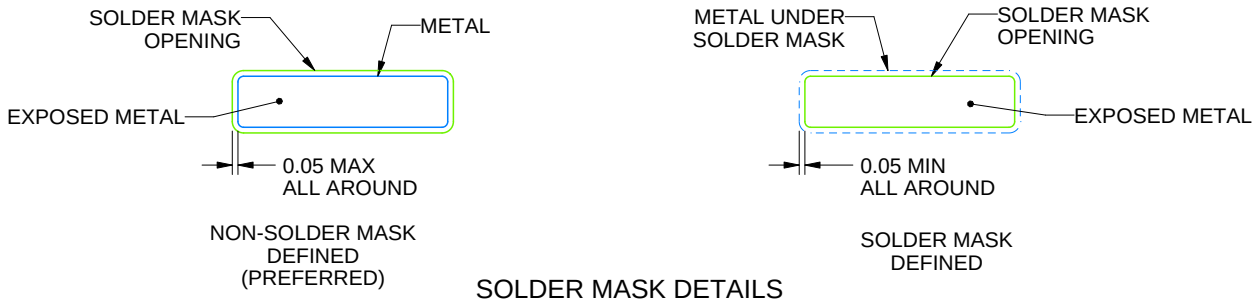

SOLDER MASK DETAILS

4220762/A 05/2024

NOTES: (continued)

5. Publication IPC-7351 may have alternate designs.
6. Solder mask tolerances between and around signal pads can vary based on board fabrication site.

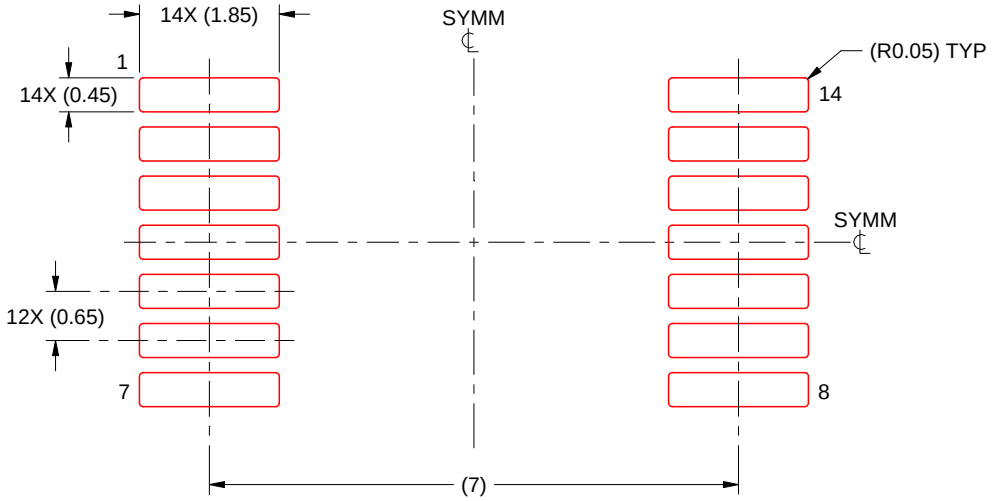

SOLDER PASTE EXAMPLE
BASED ON 0.125 mm THICK STENCIL
SCALE: 10X

4220762/A 05/2024

NOTES: (continued)

7. Laser cutting apertures with trapezoidal walls and rounded corners may offer better paste release. IPC-7525 may have alternate design recommendations.
8. Board assembly site may have different recommendations for stencil design.

GENERIC PACKAGE VIEW

FK 20

LCCC - 2.03 mm max height

8.89 x 8.89, 1.27 mm pitch

LEADLESS CERAMIC CHIP CARRIER

This image is a representation of the package family, actual package may vary.
Refer to the product data sheet for package details.

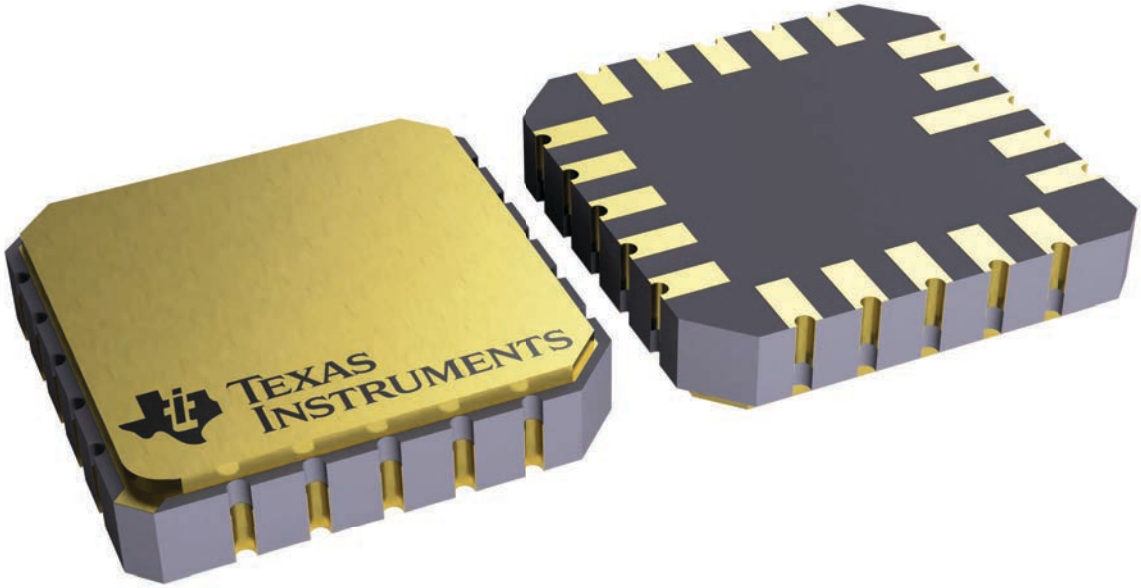

4229370VA\

J 14 CDIP - 5.08 mm max height

CERAMIC DUAL IN LINE PACKAGE

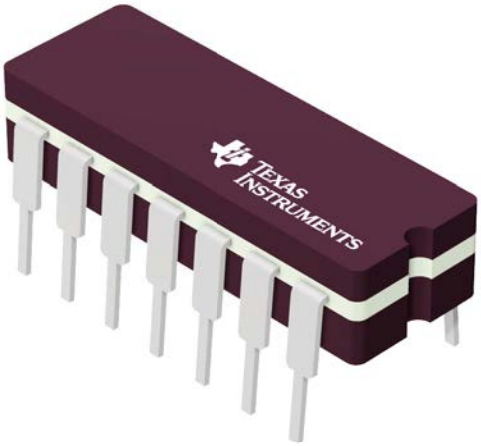

Images above are just a representation of the package family, actual package may vary.
Refer to the product data sheet for package details.

4040083-5/G

PACKAGE OUTLINE

J0014A

CDIP - 5.08 mm max height

CERAMIC DUAL IN LINE PACKAGE

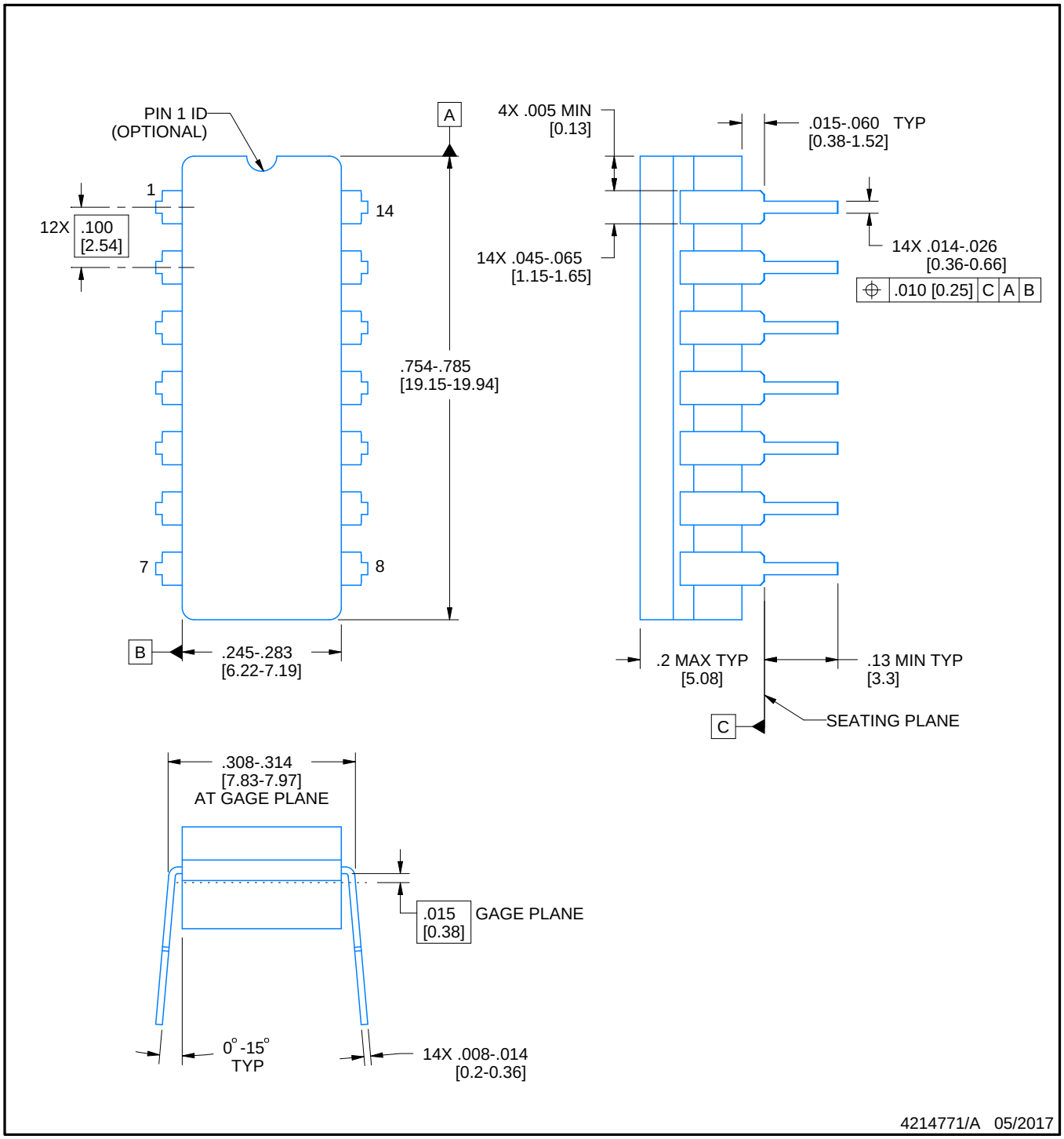

NOTES:

1. All controlling linear dimensions are in inches. Dimensions in brackets are in millimeters. Any dimension in brackets or parenthesis are for reference only. Dimensioning and tolerancing per ASME Y14.5M.
2. This drawing is subject to change without notice.
3. This package is hermitically sealed with a ceramic lid using glass frit.
4. Index point is provided on cap for terminal identification only and on press ceramic glass frit seal only.
5. Falls within MIL-STD-1835 and GDIP1-T14.

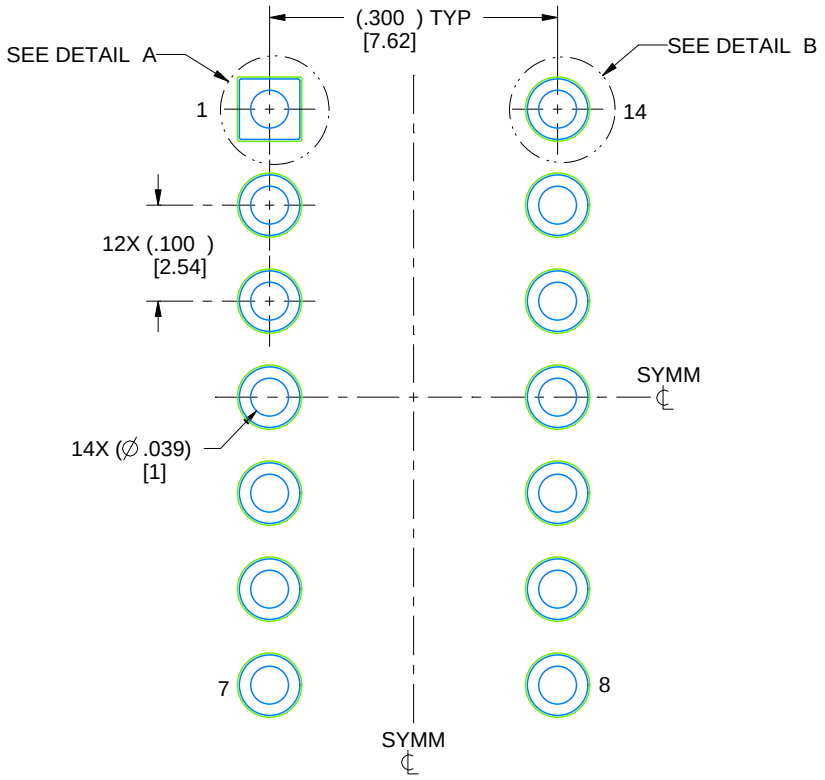

LAND PATTERN EXAMPLE
NON-SOLDER MASK DEFINED
SCALE: 5X

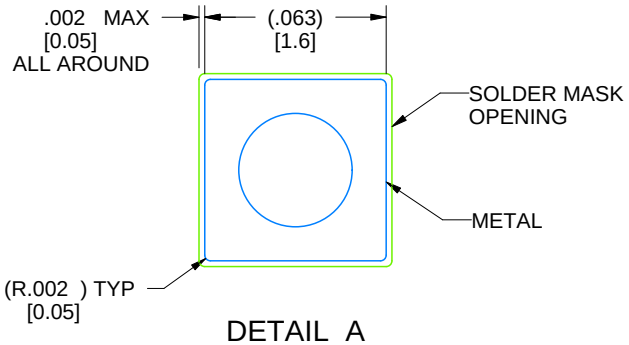

DETAIL A
SCALE: 15X

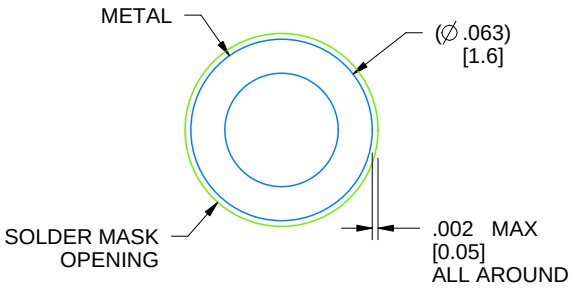

DETAIL B
13X, SCALE: 15X

4214771/A 05/2017

N (R–PDIP–T**) PLASTIC DUAL–IN–LINE PACKAGE

16 PINS SHOWN

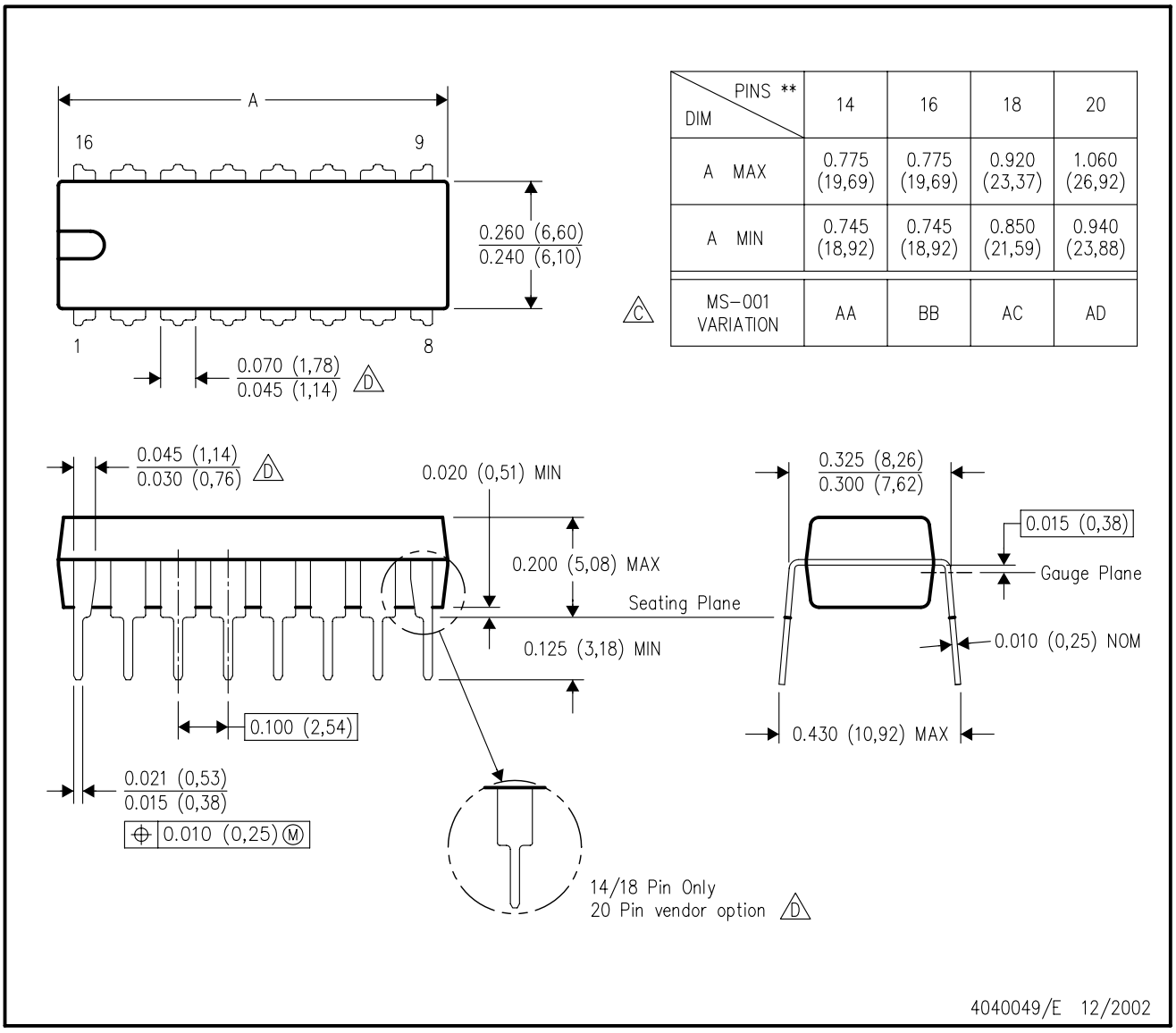

DIM \ PINS **	14	16	18	20
A MAX	0.775 (19,69)	0.775 (19,69)	0.920 (23,37)	1.060 (26,92)
A MIN	0.745 (18,92)	0.745 (18,92)	0.850 (21,59)	0.940 (23,88)
MS–001 VARIATION (C)	AA	BB	AC	AD

NOTES:
A. All linear dimensions are in inches (millimeters).
B. This drawing is subject to change without notice.
C. Falls within JEDEC MS–001, except 18 and 20 pin minimum body length (Dim A).
D. The 20 pin end lead shoulder width is a vendor option, either half or full width.

IMPORTANT NOTICE AND DISCLAIMER

TI PROVIDES TECHNICAL AND RELIABILITY DATA (INCLUDING DATA SHEETS), DESIGN RESOURCES (INCLUDING REFERENCE DESIGNS), APPLICATION OR OTHER DESIGN ADVICE, WEB TOOLS, SAFETY INFORMATION, AND OTHER RESOURCES “AS IS” AND WITH ALL FAULTS, AND DISCLAIMS ALL WARRANTIES, EXPRESS AND IMPLIED, INCLUDING WITHOUT LIMITATION ANY IMPLIED WARRANTIES OF MERCHANTABILITY, FITNESS FOR A PARTICULAR PURPOSE OR NON-INFRINGEMENT OF THIRD PARTY INTELLECTUAL PROPERTY RIGHTS.

These resources are intended for skilled developers designing with TI products. You are solely responsible for (1) selecting the appropriate TI products for your application, (2) designing, validating and testing your application, and (3) ensuring your application meets applicable standards, and any other safety, security, regulatory or other requirements.

These resources are subject to change without notice. TI grants you permission to use these resources only for development of an application that uses the TI products described in the resource. Other reproduction and display of these resources is prohibited. No license is granted to any other TI intellectual property right or to any third party intellectual property right. TI disclaims responsibility for, and you will fully indemnify TI and its representatives against, any claims, damages, costs, losses, and liabilities arising out of your use of these resources.

TI’s products are provided subject to TI’s Terms of Sale or other applicable terms available either on ti.com or provided in conjunction with such TI products. TI’s provision of these resources does not expand or otherwise alter TI’s applicable warranties or warranty disclaimers for TI products.

TI objects to and rejects any additional or different terms you may have proposed.

Mailing Address: Texas Instruments, Post Office Box 655303, Dallas, Texas 75265
Copyright © 2025, Texas Instruments Incorporated